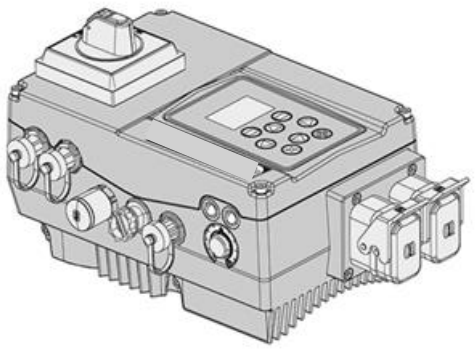

SIL2 PLd FUNCTIONAL SAFETY

Short manual dDrive

Functional safety

EN

Smart connections.

Legal notice

Rossi — Solutions for an evolving industry

HEADQUARTERS

Rossi S.p.A.
Via Emilia Ovest 915/A
41123 Modena – Italia
Tel. +39 059 33 02 88

DOC02862288-0000

Exclusion of liability

All names, trademarks, product names or other designations given in this manual may be legally protected even if this is not labelled as such (e.g., as a trademark). Rossi Spa accepts no liability and gives no assurance that they can be freely used.
The illustrations and texts have been compiled with great care. However, the possibility of errors cannot be ruled out. The compilation is made without any guarantee.

General note on gender equality

Rossi Spa is aware of the importance of language with regard to the equality of women and men and always makes an effort to reflect this in the documentation. Nevertheless, for the sake of readability we are unable to use non-gender-specific terms throughout and use the masculine form instead.

The chapters marked with this symbol form part of the complete operating manual.
Please read and note the information provided there.

Complete operating manual

You will find a detailed operating manual for the dDrive by Rossi online at www.Rossi.com
(Document no. of the operating manual: DOC02202208)

Proper use

- **Proper use**

IMPORTANT INFORMATION

- Using drive controllers in equipment that is not fixed is considered as an exceptional environmental condition and is only permitted if allowed by the standards and guidelines applicable on site.
- Only allow appropriately qualified staff to undertake assembly and disassembly.
- Only use staff who are trained in mounting, installation, commissioning and handling.
- Do not modify the drive controller.
- Observe general and national safety and accident prevention regulations

Labels on the drive controller

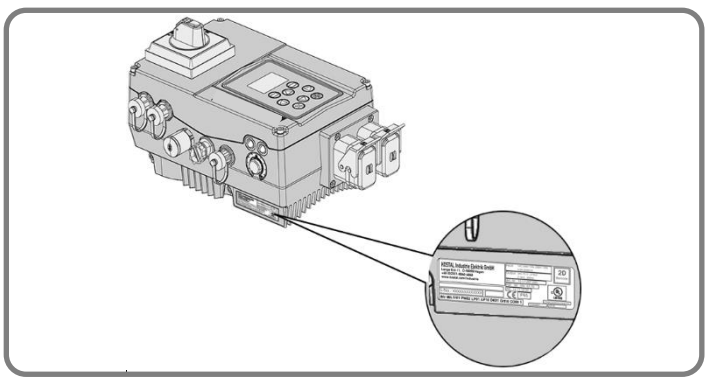

Signs and labels are applied to the housing of the drive controller.
These signs and labels may not be altered or removed.

Symbol	Meaning
	Danger due to electrical shock and discharge
2 min	Danger due to electrical shock and discharge. Wait two minutes (discharge time of the capacitors) after shut-down
	Additional earth connection
	Observe and read operating manual

- **Qualified staff**
- **Proper use**
- **Responsibility**
- **CE marking**
- **Abbreviations used**
- **Certificate**

Contact details and service

If you have any technical questions, please contact our service hotline.

Country	Phone	E-mail
Italy and other countries	+39 059 33 02 88	info@rossi.com

1 SAFETY INSTRUCTIONS

- **General safety instructions**

STO safety instructions

The safety instructions listed in the following are to be observed and obeyed strictly.

Protection from electric shock

IMPORTANT INFORMATION

No protection from electric shock is ensured by the STO status.

DANGER!

Risk of death due to electrical shock!
Death or serious injury!
De-energise drive controller and secure it against being restarted.
The following terminals may lead to dangerous currents even when the motor is not running:

- Supply terminals X1: L1, L2, L3
- Motor connection terminals X2: U, V, W

Protection from contamination

IMPORTANT INFORMATION

When the housing is open, contamination level 2 must be observed in order to ensure the safety function.

Elimination of errors

IMPORTANT INFORMATION

The STO connection line must be shielded in order that the elimination of errors with regard to external voltage coupling may be applied.

Elimination of errors with regard to short circuit

IMPORTANT INFORMATION

With reference to the STO connection cable, the “elimination of errors with regard to short circuit” is achieved in accordance with DIN EN 13849-2 if a separate, shielded cable is used. Shielding is to be applied at both ends.

Loss of the safety functions

IMPORTANT INFORMATION

Permanent 24 V voltage to the STO input results in the loss of the safety function.

Classification EN 60204-1

IMPORTANT INFORMATION

- "Stop category-1" (SS1) and "Stop category-2" (SS2) are not supported by the drive controller.

Classification EN 61800-5-2

STO (Safe Torque Off)

No power is supplied to the motor that could cause rotation (or movement in the case of a linear motor).
The drive controller supplies no power to the motor that could generate torque (or force in the case of a linear motor). This safety function corresponds to an uncontrolled shut-down according to EN 60204-1, stop category 0.

IMPORTANT INFORMATION

- This safety function can be used when it is necessary to shut off power in order to prevent an unexpected start.
- Where there are external influences (e.g. falling of suspended loads), additional measures (e.g. mechanical braking), which must be designed to fail safe, may be necessary to prevent hazards.
- In the STO status, the drive is not separated from the energy supply, as only the activation of the IGBTs is securely switched off.

Classification of one-channel EN 62061 without external diagnosis

The classification of the one-channel STO function without external diagnosis meets the following requirements:

Designation	Value	Explanation
Safety measure	Pulse block	---
SIL	1	Safety integrity level
PFH	2.50e-07	Probability of hazardous failures per hour
DC	0 [%]	Diagnosis coverage
SFF	50 %	Proportion of safe failures
T	20 years	Duration of usage

Table: Classification of one-channel EN 62061, without external testing

Classification of one-channel EN 62061 with external diagnosis

The classification of the one-channel STO function with external diagnosis meets the following requirements:

Designation	Value	Explanation
Safety measure	Pulse block	---
SIL	2	Safety integrity level
PFH	2.50e-08	Probability of hazardous failures per hour
DC	90 [%]	Diagnosis coverage
SFF	95 %	Proportion of safe failures
T	20 years	Duration of usage

Table: Classification of two-channel EN 62061 with external testing

Classification of one-channel EN ISO 13849-1 without external diagnosis

The classification of the one-channel STO function without external diagnosis meets the following requirements:

Designation	Value	Explanation
Safety measure	Pulse block	---
PL	c	Performance level
Category	1	---
MTTFd	457 [a]	Mean time to failure (dangerous)
DC	0 [%]	Diagnosis coverage
T	20 years	Duration of usage
Max. diagnosis test interval	Once every 3 months	

Table: Classification of one-channel EN 13849-1, without external testing

Classification of one-channel EN ISO 13849-1 with external diagnosis

The classification of the one-channel STO function with external diagnosis meets the following requirements:

Designation	Value	Explanation
Safety measure	Pulse block	---
PL	d	Performance level
Category	2	---
MTTFd	457 [a]	Mean time to failure (dangerous)
DC	90 [%]	Diagnosis coverage
T	20 years	Duration of usage
Max. diagnosis test interval	Once every 3 months	

Table: Classification two-channel EN ISO 13849-1 with external diagnosis

2 Type key/scope of application

The dDrive by Rossi drive controller platform contains variants with and without safety function STO. These variants are clearly recognisable by the product key. The STO safety function cannot be retrofitted.

Type key/scope of application

Item designation for Rossi "dDrive"

INV MPx VSxx IVxx PWxx LPxx APxx GHxx DKxx OAxx IO1x COxx

dDrive

INV	MPx	VS02	IV01	PWxx	LPxx	APxx	GHxx	DKxx	OAxx	IO1x	COxx
INV	MPx	VS02	IV01	PWxx	LPxx	APxx	GHxx	DKxx	OAxx	IO3x	COxx

3 Technical data

Technical data, general

■ **Technical data, general**

General technical data

	Size A				
Motor rating [kW]	0.55	0.75	1.1	1.5	2.2 LD
Ambient temperature	- 40 °C (non-condensing) to + 50 °C (without derating)				up to + 40 °C
	Size B				
Motor rating [kW]	2.2	3.0	4.0		5.5 LD
Ambient temperature	- 40 °C (non-condensing) to + 50 °C (without derating)				up to + 40 °C
	Size C				
Motor rating [kW]	5.5	7.5	4.0		11 LD
Ambient temperature	- 40 °C to + 50 °C > 50 °C (with derating)				up to + 40 °C
	Size D				
Motor rating [kW]	11	15	18.5	22	30 LD
Ambient temperature	- 40 °C to + 50 °C > 50 °C (with derating)				up to + 40 °C

	Sizes A-D
Storage temperature	- 40 °C…+ 85 °C

	Sizes A-D
Vibration resistance (DIN EN 60721-3-3)	3M7 (3g)

	Sizes A - C	Size D
Protection class [IPxy]	IP 65	IP 55

Technical data STO

Designation	Value	Unit
STO max. response time	50	ms
PELV/SELV power supply for STO input voltage (rating)	24	VDC
PELV/SELV tolerance for STO input voltage (referring to rating)	± 25	%
Current consumption STO channel with rated voltage	Typ. 80	mA
Start-up peak current (2.5 ms)	500	mA
Compatibility: Max. OSSD pulse	1	ms
Compatibility: Min. OSSD pulse period time	10	ms
STO Input Low	0..5	V
STO Input High STO Input High when operating with OSSD signals	18..30 19.2..30	V V

Table: Technical data STO

The STO response time is the time between deactivation of the STO input signal and the definite fail-safe pulse block.

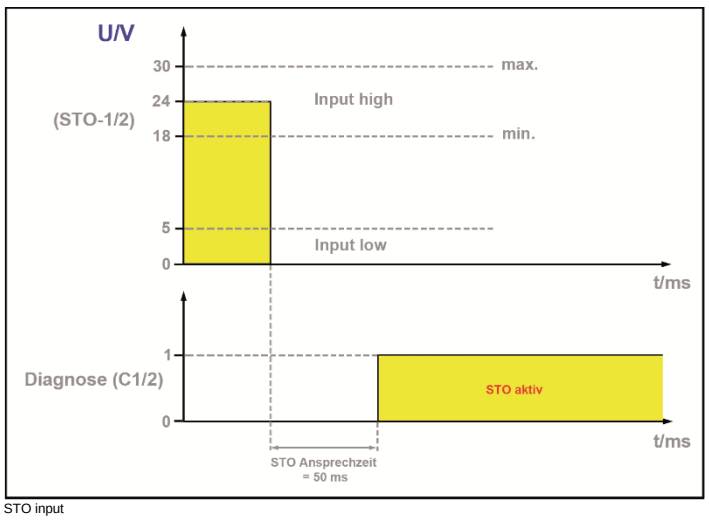

STO input

IMPORTANT INFORMATION

The maximum STO response time of 50 ms is to be taken into account when using the machine

4 Safety functions

STO function (Safe Torque Off)

After the STO function is triggered, the drive is switched off (impulse block) and the drive control runs down without braking (when no brake has been activated).

IMPORTANT INFORMATION

The shut-down time must be considered in this application.

IMPORTANT INFORMATION

Residual risk

An error scenario occurs when two (non-adjacent) control branches short-circuit within a short period. This behaviour may be caused either by the IGBTs short-circuiting or by the control drivers interconnecting (also a short-circuit). The error is only to be considered critical if the drive remains in the STO status at this point in time. In the event of failure occurring twice, an unwanted jerk may occur, the angle of rotation of which depends on the number of poles of the selected drive and on the gear ratio of the gearbox.

5 Application instructions - Safety

Restarting protection

IMPORTANT INFORMATION

In the event of dangerous loads having an external effect, a hazard can originate from the STO status when no further measures are taken.

In addition to the switching examples, the instructions on the subject of "Restarting" from the standards DIN EN ISO 13849-1 (BGIA Report 2/2008) and EN 60204 are to be considered.

The resetting of a safety requirement alone may not automatically result in the restarting of the drive.
Restarting may only be made possible through a fault acknowledgement (manual reset) at the safety switching device.

IMPORTANT INFORMATION

Depending on the parameters set, it is possible for the drive controller to start up automatically.

Internal auxiliary voltage

The controller's 24 V is available at pin 1 and pin 3 of the 8-pin M12 plug in accordance with the SELV/PELV requirement and can be used as the supply voltage for the STO channel.

6 Parameterisation

We recommend deactivating the "auto acknowledgement" of a fault (parameter 1.181), as otherwise an immediate restart may occur as soon as the fault is no longer present.

STO

IMPORTANT INFORMATION

The restart protection (not safety-related, parameter 1.132) should under no circumstances be deactivated, as otherwise an immediate restart can occur when the STO voltage is activated.

7 Diagnosis

The status of the STO function is signalled with the help of a potential-free signalling contact that is closed in the safe status. The deactivated pulse inhibitor is thus displayed. This contact can be used as a response to a higher level control unit.

Diagnosis safety function

STO 1	Contact	Note
Off	closed	STO channel not supplied: STO active
On	open	STO channel supplied: Operation possible

IMPORTANT INFORMATION

- The maximum delay time between the activation of the safety function by the input-side safety device and the closing of the contact is 50 ms.
- This reaction time is to be observed when using the machine and configured in accordance with the external fault diagnosis.

External diagnosis

An external diagnosis is necessary in order to achieve diagnosis coverage of 90% and the resulting safety parameters. The signalling contact is thereby monitored for plausibility in accordance with the status of the STO input. Always carry out diagnosis before starting up the motor.

8 Terminal assignment

The 8-pin M12 plug serves as the input-end connection for electro-mechanical and electronic safety switching devices.

In addition to the safety-related input, signalling contacts are available on the contacts of the 8-pin M12 plug with pins 7 and 8 (diagnosis).

Terminal assignment M12 8-pin

Control connections for functional safety

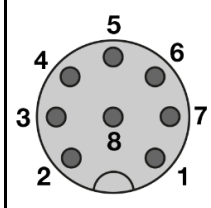

8-pin M12 flanged bush A-coded with yellow insert	
Pin	Assignment
1	24 V OUT dDrive
2	n. c.
3	GND OUT dDrive
4	n. c.
5	24 V STO IN
6	GND STO IN
7	Contact
8	Contact

9 Installation/disassembly/commissioning

In this document, the installation and disassembly instructions as well as the information concerning commissioning refer only to functional safety.

Installation

■ **Installation**

STO connection cable

With reference to the STO connection cable, "elimination of errors with regard to short circuit" is achieved in accordance with DIN EN 13849-2 by using a shielded cable for the STO cable (see assignment above). Shielding is to be applied at both ends.

The maximum cable length for the connection of the STO channel is 30 m.

The cable cross-section is to be designed in such a way to ensure the required minimum input voltage of 18 V or 19.2 V during operation with OSSD signals.

STO validation

In the context of commissioning, it is essential to request the STO function of the drive controller in order to ensure problem-free functioning.

To this purpose the STO function is requested with running motor. The motor must then run down.

The diagnosis function must also be checked. Refer to operating manual for more details.

10 Dealing with malfunctions

■ **Error detection and troubleshooting**
■ **Malfunction overview**
■ **Fault display**
■ **Fault-finding and troubleshooting**

11 Maintenance

■ **Maintenance**
■ **Maintenance checklist**

See chapter 1 "General information" of the operating manual "dDrive by Rossi controller".

Safety function

The STO function is requested when the motor is running. The motor must then run down. In accordance with the selected safety application, it must also be proven that diagnosis is functioning correctly.